CATÁLOGO 2025

ERSATZ
SOLUCIONES PARA MINERÍA

PERFORADORAS

REPUESTOS ACCESORIOS SERVICIOS

ROTARY BLASTHOLE DRILL RIGS

Atlas Copco

CAT

SANDVIK

Epiroc

BUCYRUS

P&H

ventas@ersatz-peru.com +51 970 470 199 www.ersatz-peru.com

CATÁLOGO DE PRODUCTOS

- **PARABRISAS** LAMINADOS DE SEGURIDAD ▶ 1
- **SISTEMA** LIMPIAPARABRISAS ▶ 2
- **PERSIANAS ROLLER** PARA CABINA ▶ 3
- ASIENTO **DE OPERADOR** ▶ 4
- **ALFOMBRA PARA CABINA** DE AISLAMIENTO ACÚSTICO ▶ 5
- SELLOS- BURLEQUES PARA **PUERTAS** ▶ 6
- **ESPEJO** CONVEXO ▶ 7
- **CIRCULINAS** ESTROBOSCÓPICAS ▶ 8
- **CLÁXON** ELÉCTRICO ▶ 9
- **CORTINAS PARA POLVO** DUST SEAL ▶ 10
- **SELLO** PARA BARRA DE PERFORACIÓN ▶ 11
- **LLAVE** PARA BLOQUEO DE VÁSTAGO ▶ 12
- **MORDAZAS** PARA LLAVE BREAKOUT O CAIMÁN ▶ 13
- **MORDAZAS** PARA LLAVE DE CENTRALIZADOR DE BARRA ▶ 14
- **BOMBA** DEL SISTEMA DE AGUA ▶ 15
- ABRAZADERA **3 U BOLT DE 4"** SISTEMA DE BARRIDO ▶ 16
- PERNOS PARA AJUSTE DE **ZAPATAS** ▶ 17
- **PULSADORES** DE PARADA DE EMERGENCIA ▶ 18
- **BOMBA** DEL SISTEMA DE LUBRICACIÓN ▶ 19
- INYECTORES DE **GRASA** ▶ 20
- **PADS ANTI-VIBRACIÓN** PARA ENFRIADORES ▶ 21
- **CÁMARAS** DE SEGURIDAD ▶ 22
- **ACCESORIOS** PARA WINCHE AUXILIAR ▶ 23
- SISTEMA DE **LAVADO** DE EQUIPO ▶ 24

PARABRISAS LAMINADOS DE SEGURIDAD

PART NO.	DESCRIPTION
57588063	GLASS.LOWER FRONT WINDOW
57588055	GLASS,UPPER FRONT WINDOW
57588105	GLASS,SIDE WINDOW-FRONT
57674822	GLASS,SIDE WINDOW-REAR
57588097	GLASS,DRILL DECK

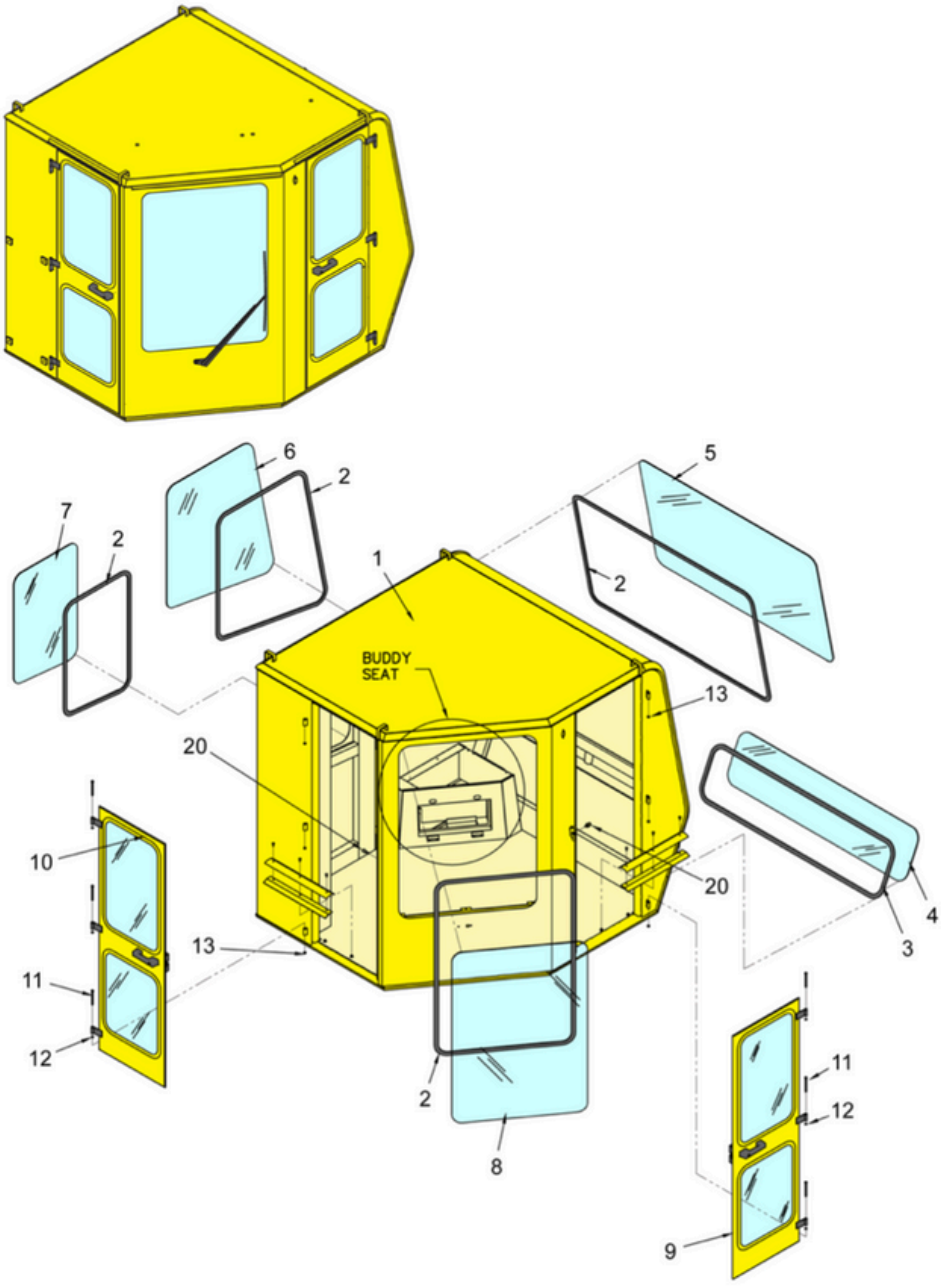

SISTEMA LIMPIAPARABRISAS

PART NO.	DESCRIPTION
57541153	ARM,WIPER-28
57674798	ADAPTER,KIT,PANTO
57674814	ADAPTER,WET ARM
57674780	HOSE,WASHER
57806705	WIPER MOTOR,DRILL SIDE
57806713	WIPER MOTOR,FRONT WINDOW
58451211	ARM,WIPER 26"
58451218	BLADE, 20" WIPER

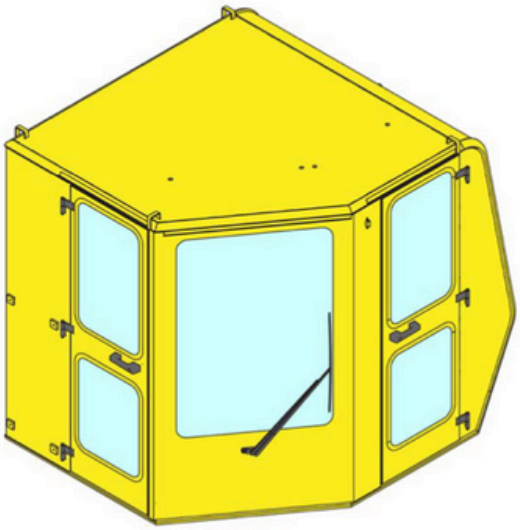

BLADE WIPER

ARM WIPER

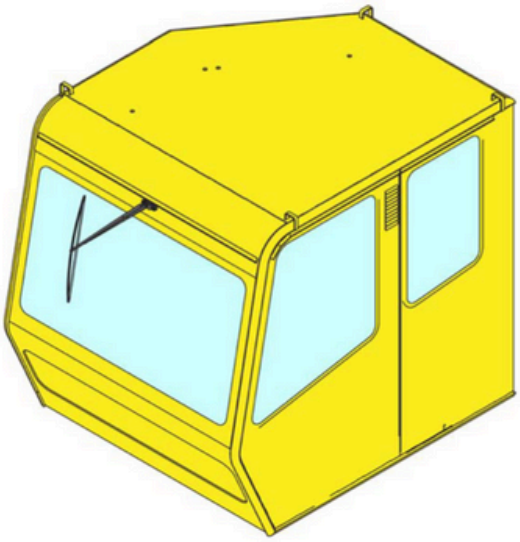

MOTOR WIPER

PERSIANAS PARA CABINA

PART NO.	DESCRIPTION
58552529	SHADE, ASM, DRILL DOOR
58552389	SHADE, ASM, DRILL WINDOW
58552417	SHADE,ASM, ENTRY DOOR

NEW PRODUCT

ASIENTO DE OPERADOR

PART NO.	DESCRIPTION
58327921	CHAIR,ASM,RCS4,PV351
58400006	KIT CHAIR REPAIR

SERVICIO DE REPARACIÓN

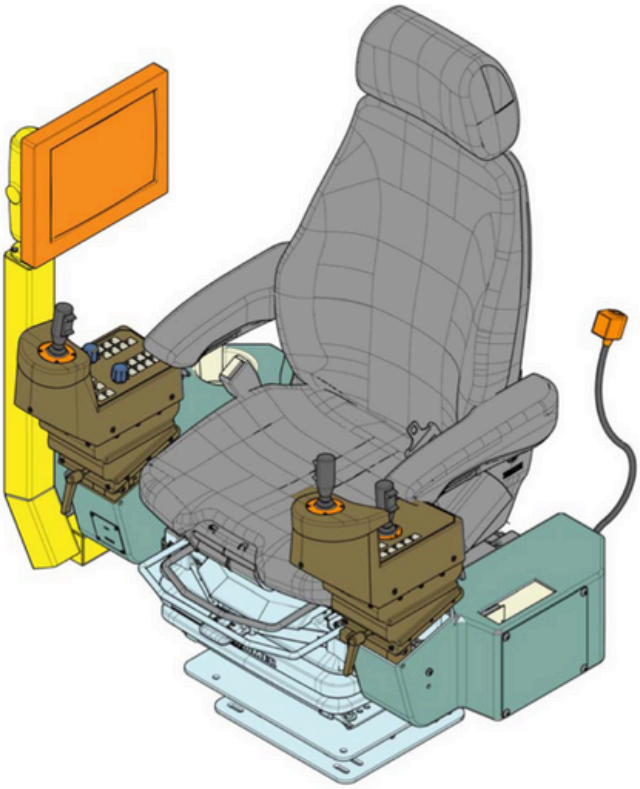

ALFOMBRA AISLAMIENTO ACÚSTICO

PART NO.	DESCRIPTION
57674855	FLOORMAT,CAB

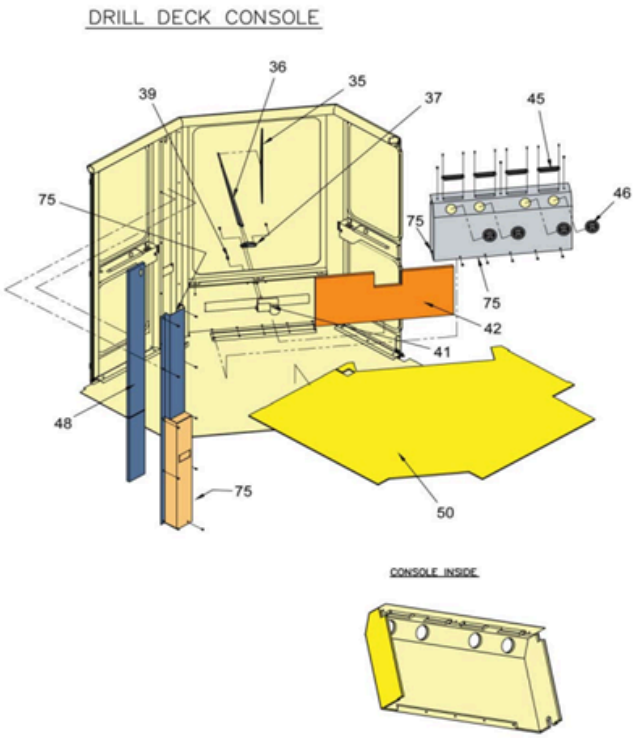

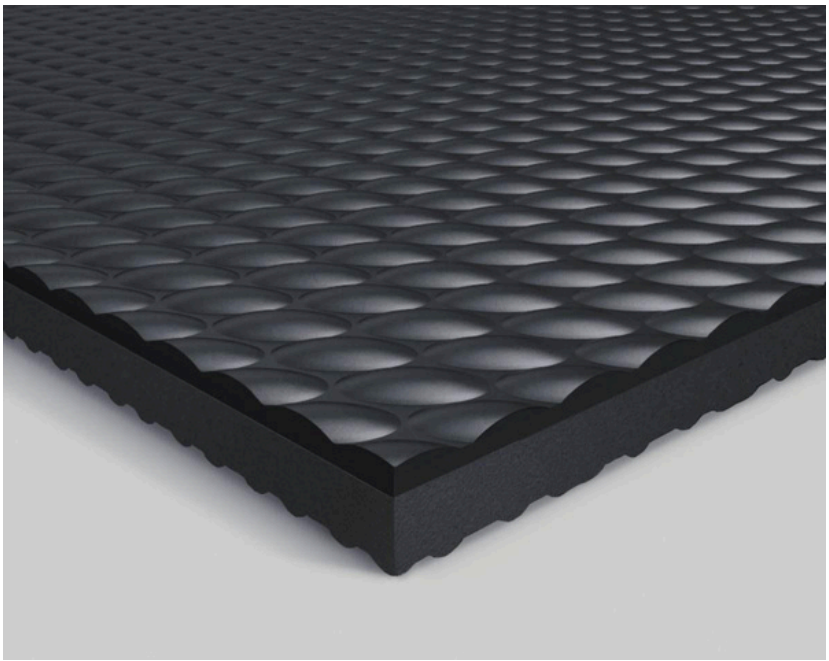

SELLOS BURLEQUES - PUERTA DE CABINA

PART NO.	DESCRIPTION
54496690	PUMP,WATER INJ. 25GPM MODEL 2520 . 3000
6107	GRAVITY FEED OILER
30278	GRAVITY FEED OILER

ESPEJO CONVEXO

PART NO.	DESCRIPTION
58385320	ESPEJO CONVEXO HD ASM

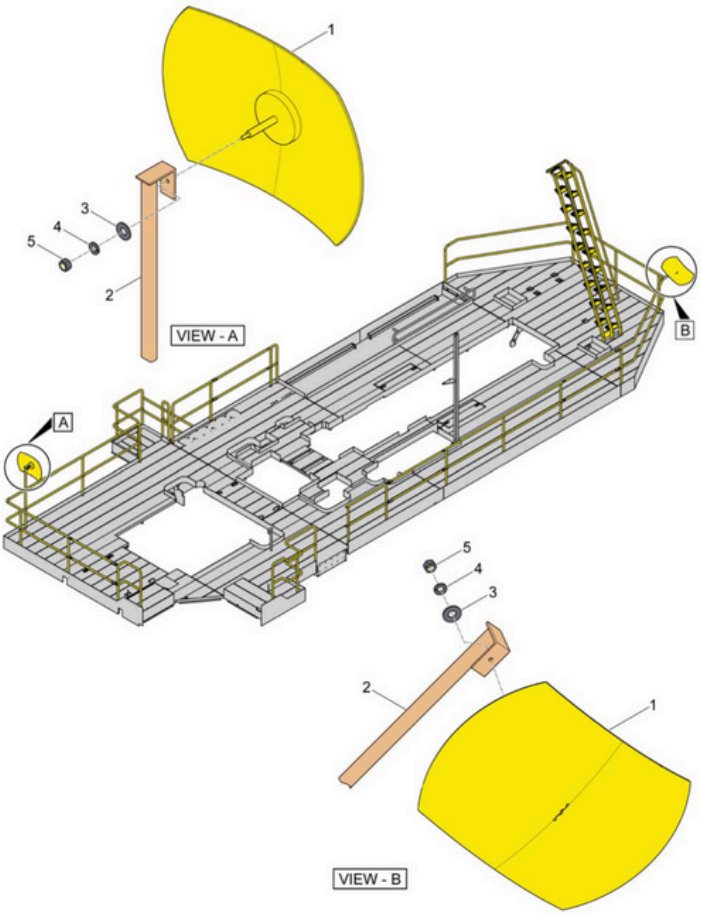

ROUND RECTANGULAR GLASS - INDOOR

Model	Size	Useage	Shipping Wt.
RR1218	12" x 18"	Areas to 15', low ceiling	6 lbs.
RR1524	15" x 24"	Areas to 20', low ceiling	11 lbs.
RR2030	20" x 30"	Areas to 30', low ceiling	18 lbs.
RR2436	24" x 36"	Areas to 35', low ceiling	36 lbs.

ROUND RECTANGULAR GLASS - OUTDOOR

Model	Size	Useage	Shipping Wt.
RRO1218	12" x 18"	Areas to 15' outdoor	6 lbs.
RRO1524 +	15" x 24"	Areas to 20' outdoor	11 lbs.
RRO2030 +	20" x 30"	Areas to 30' outdoor	18 lbs.
RRO2436 +	24" x 36"	Areas to 35' outdoor	36 lbs.

+ Models that include double mounting hardware

CIRCULINAS ESTROBOSCÓPICAS

PART NO.	DESCRIPTION
57140949	LIGHT,STROBE-AMBER
57521957	LIGHT,BLUE STROBE

7960 PULSE® SERIES

"7965 SERIE PULSE® II BALIZA LED"

CLÁXON ELÉCTRICO

PART NO.	DESCRIPTION
57372484	HORN,24VDC

150 dBA

112 dBA

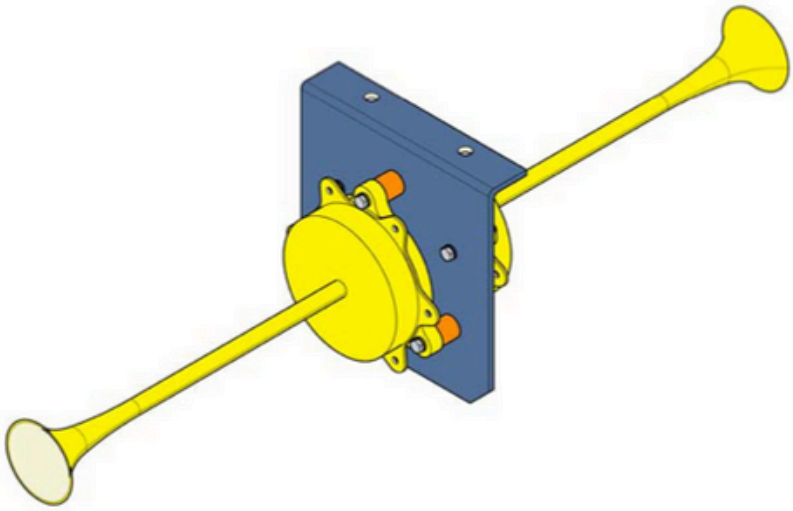

CORTINAS PARA POLVO / DUST SEAL

PART NO.	DESCRIPTION
57214165	SKIRT, DUST CURTAIN-EXT.
57484032	SKIRT, DUSTCURTAINS-SIDE
57214181	SKIRT, DUST CURTAIN-INT.

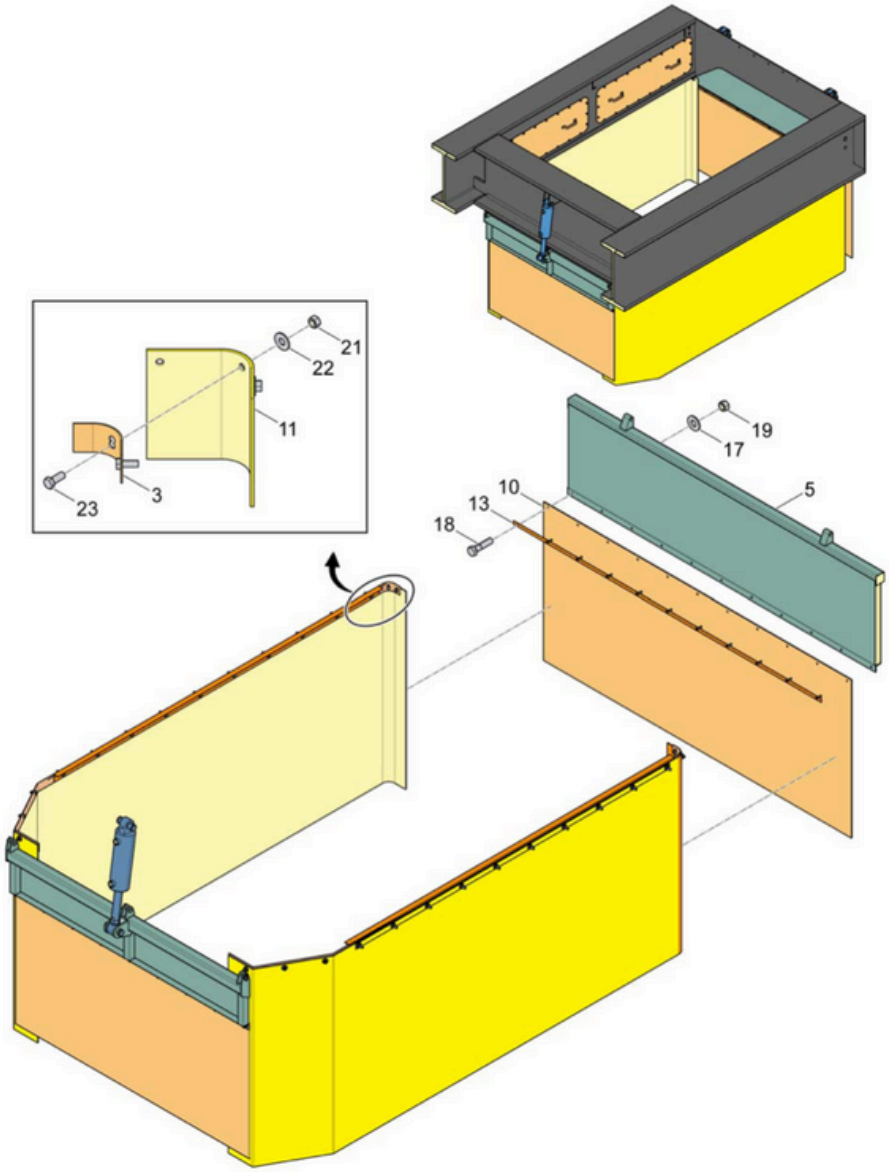

SELLO PARA BARRA DE PERFORACIÓN

PART NO.	DESCRIPTION
57636003	SEAL,WIPER

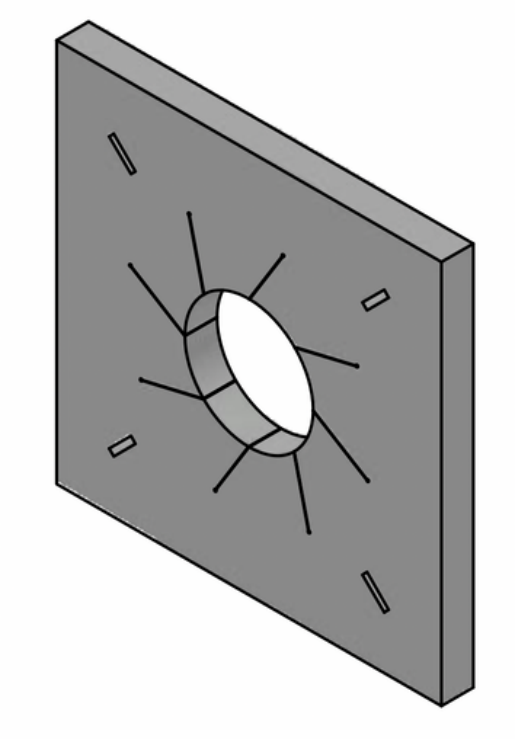

LLAVE DE BLOQUÉO DE VÁSTAGO

PART NO.	DESCRIPTION
57635963	FORK
92005002	ADAPTER,DECK,PV351

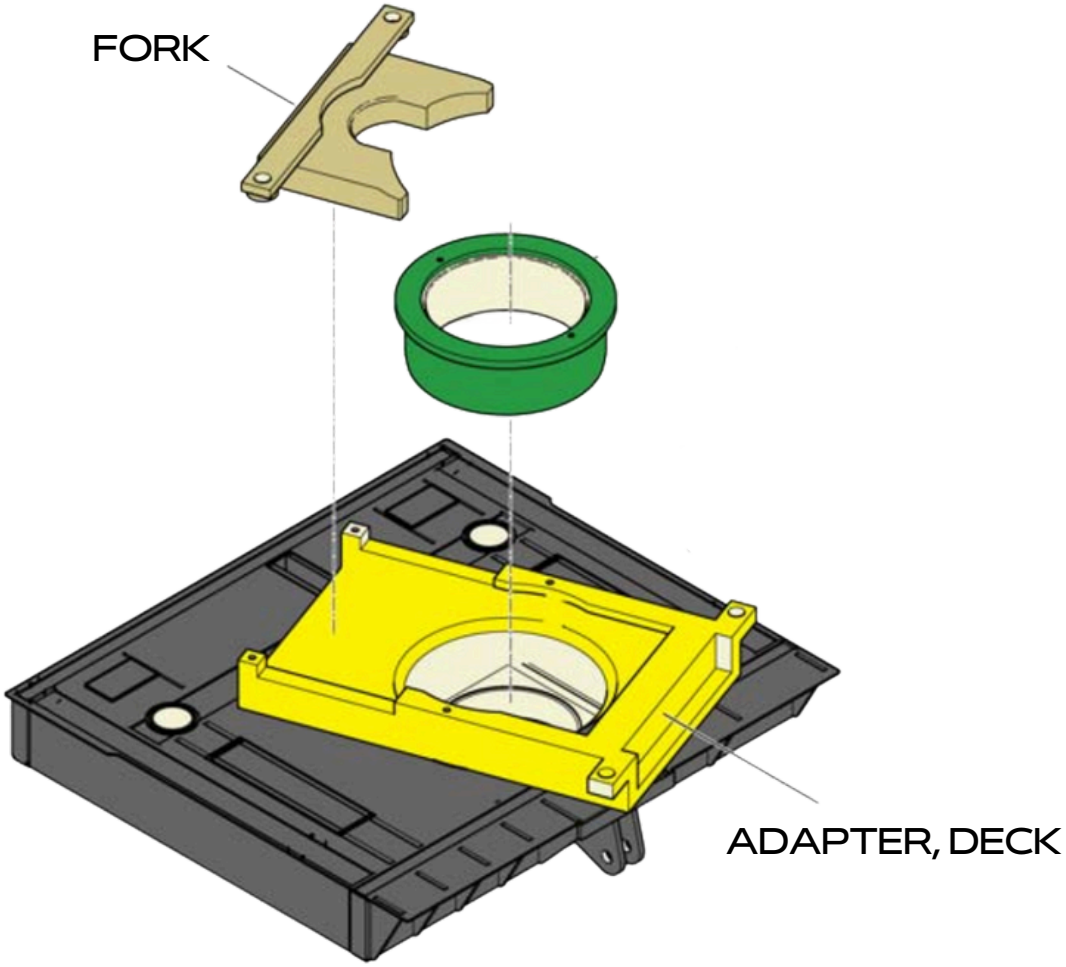

MORDAZAS DE LLAVE BREAKOUT

PART NO.	DESCRIPTION
57385270	DIE,MANUAL TONG

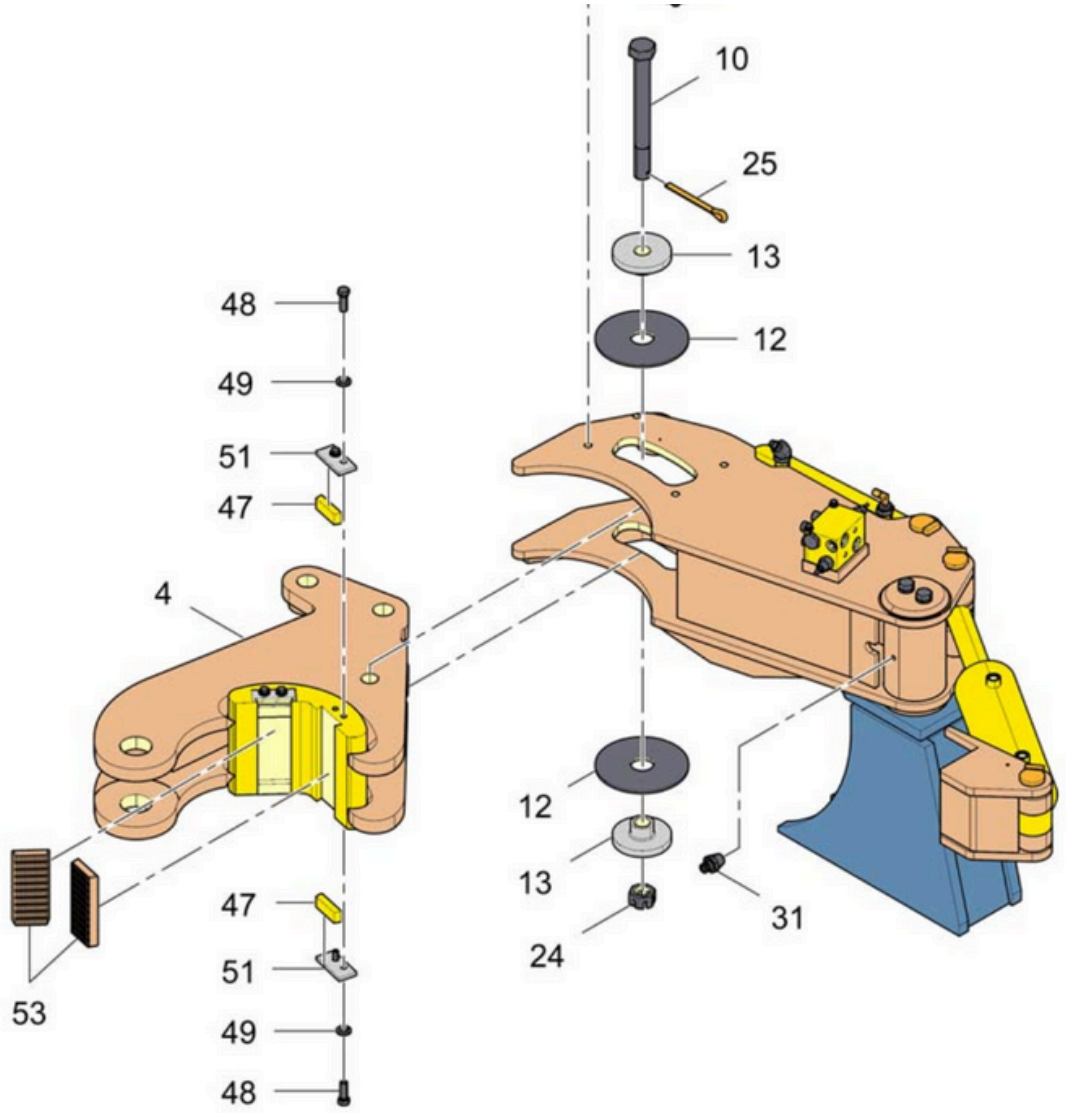

MORDAZAS DE LLAVE DE CENTRALIZADOR DE BARRA

PART NO.	DESCRIPTION
52262052	INSERT
57583379	SPACER,INSERT

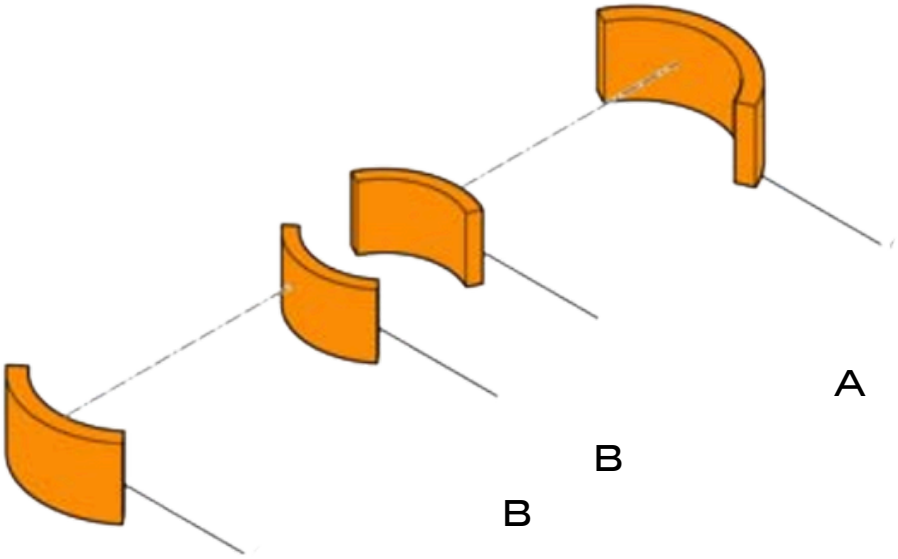

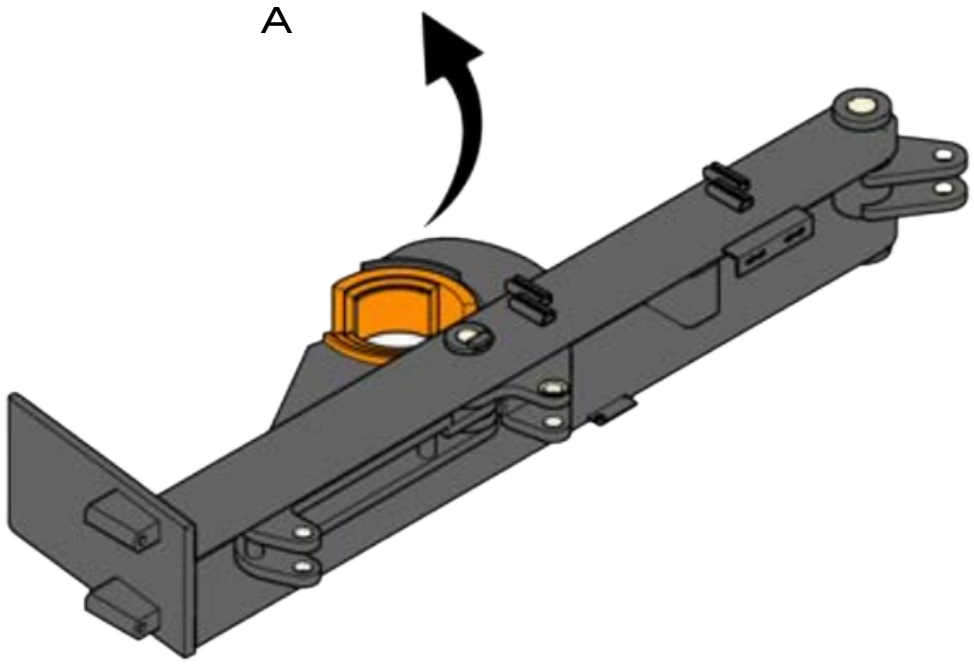

BOMBA DEL SISTEMA DE AGUA

PART NO.	DESCRIPTION
54496690	PUMP,WATER INJ. 25GPM MODEL 2520 . 3000
6107	GRAVITY FEED OILER
30278	GRAVITY FEED OILER

MODELO: 2520

SPECIFICATIONS	U.S. Measure	Metric Measure
Flow	25 gpm	94.6 lpm
Pump Pressure Range	100–800 psi	6.9–55 bar
Pump RPM*	772 rpm	772 rpm
Inlet Pressure Range	-8.5 to 40 psi	-0.6 to 2.8 bar
Max. Liquid Temp. (NBR) (2520, 2525)	160° F	71° C
Alternative seals available for higher temperatures up to 180° F		
Max. Liquid Temp. (2520C)	210° F	98° C
Bore	1.490"	38 mm
Stroke	1.417"	36 mm
Crankcase Capacity	84 oz	2.5 l
Inlet Ports (1)	1 ¼" NPT(F)	1 ¼" NPT(F)
Flush Ports (2) (2520C)	¼" NPT(F)	¼" NPT(F)
Discharge Ports (3)	1" NPT(F)	1" NPT(F)
Shaft Diameter	1.181"	30 mm
Pulley Mounting	Either Side	Either Side
Weight	54 lbs	24.5 kg
Dimensions (2520, 2525)	21.93 x 15.04 x 7.8"	557 x 382 x 198 mm

*Pump minimum is 100 RPM.

ABRAZADERA 3 U-BOLT PARA MANGUERA DE 4"

PART NO.	DESCRIPTION
57593089	ABRAZADERA TRIPLE U-BOLT 4"

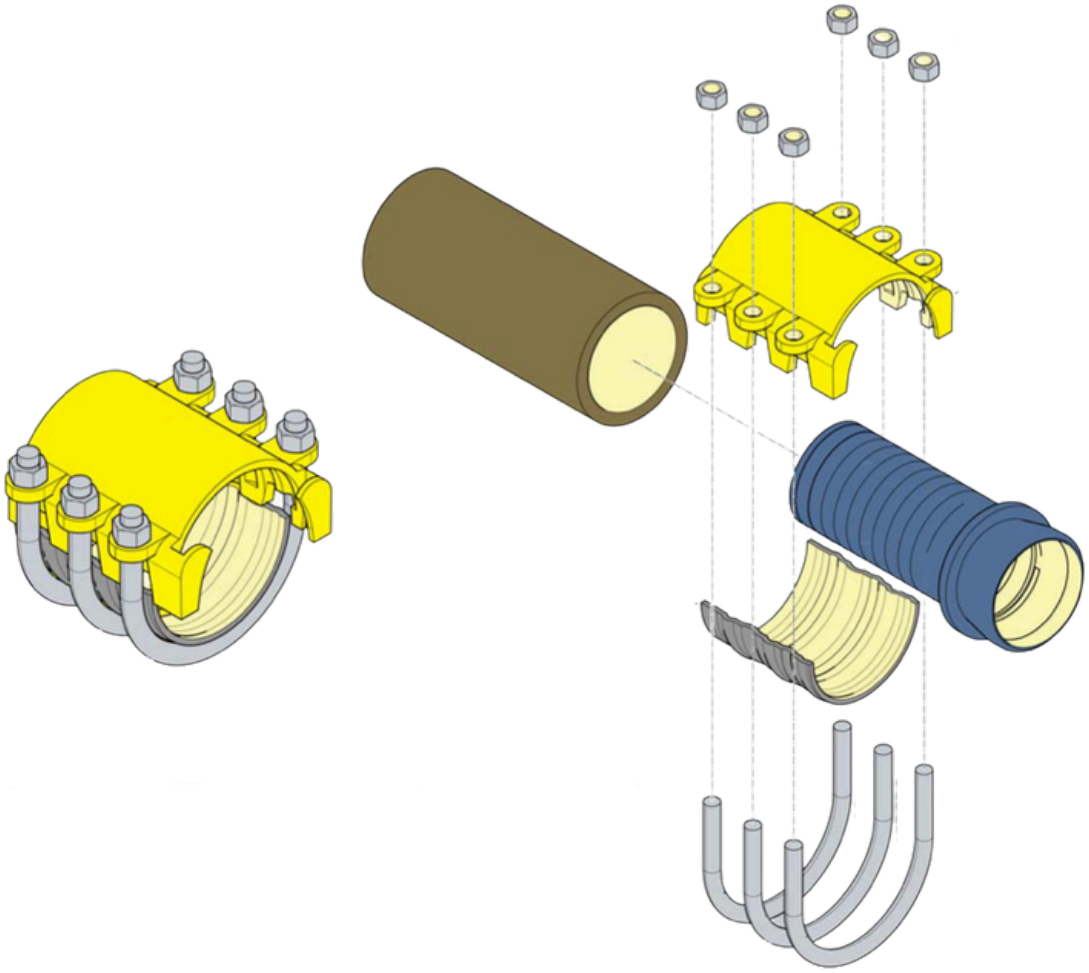

PERNO PARA AJUSTE DE ZAPATA

PART NO.	DESCRIPTION
57730012	PERNO PARA ZAPATA
57730020	TUERCA PARA ZAPATA

PULSADOR DE PARADA DE EMERGENCIA

PART NO.	DESCRIPTION
57358855	PUSHBUTTON, EMERGENCY
57712028	PUSHBUTTON, EMERGENCY OPERATOR

BOMBA DE L SISTEMA DE LUBRICACIÓN

PART NO.	DESCRIPTION
57698128	LUBE,CENTRO W/TANK ANGLE

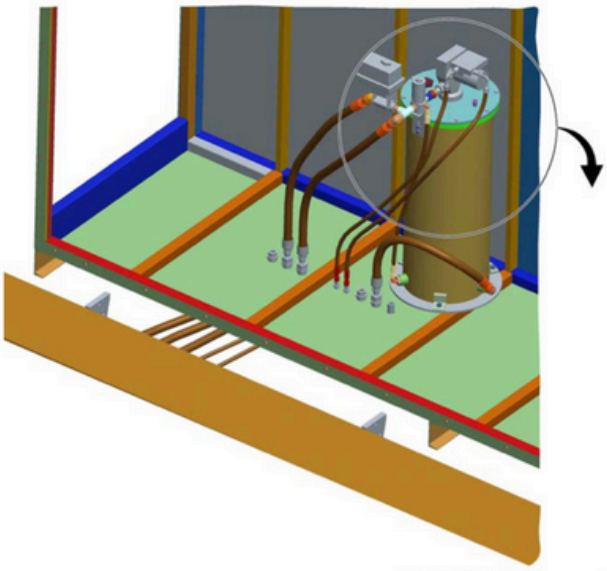

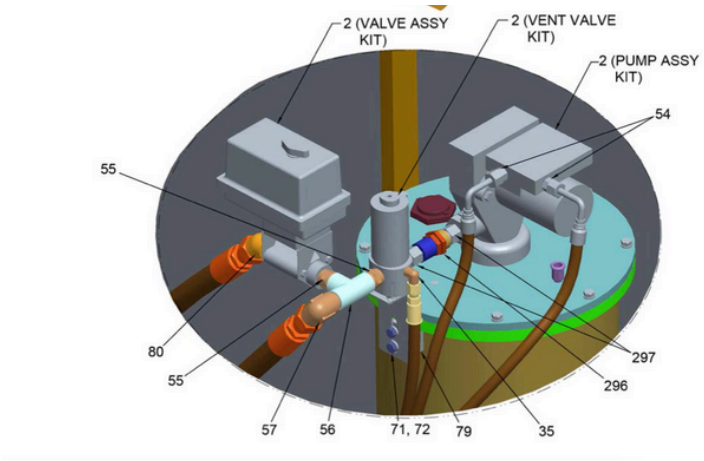

INYECTORES DE GRASA

PART NO.	DESCRIPTION
57628554	INJECTOR,LS 11
57070757	INJECTOR, SL1/2 BANK
57070765	INJECTOR, SL1/3 BANK
57070773	INJECTOR, SL1/4 BANK
57628554	INJECTOR,LS 11
57070781	INJECTOR,SL1/5 BANK

PADS ANTI-VIBRACIÓN PARA ENFRIADORES

PART NO.	DESCRIPTION
57608010	PAD,ANTI-VIBRATION
57608069	PAD,ANTI-VIBRATION

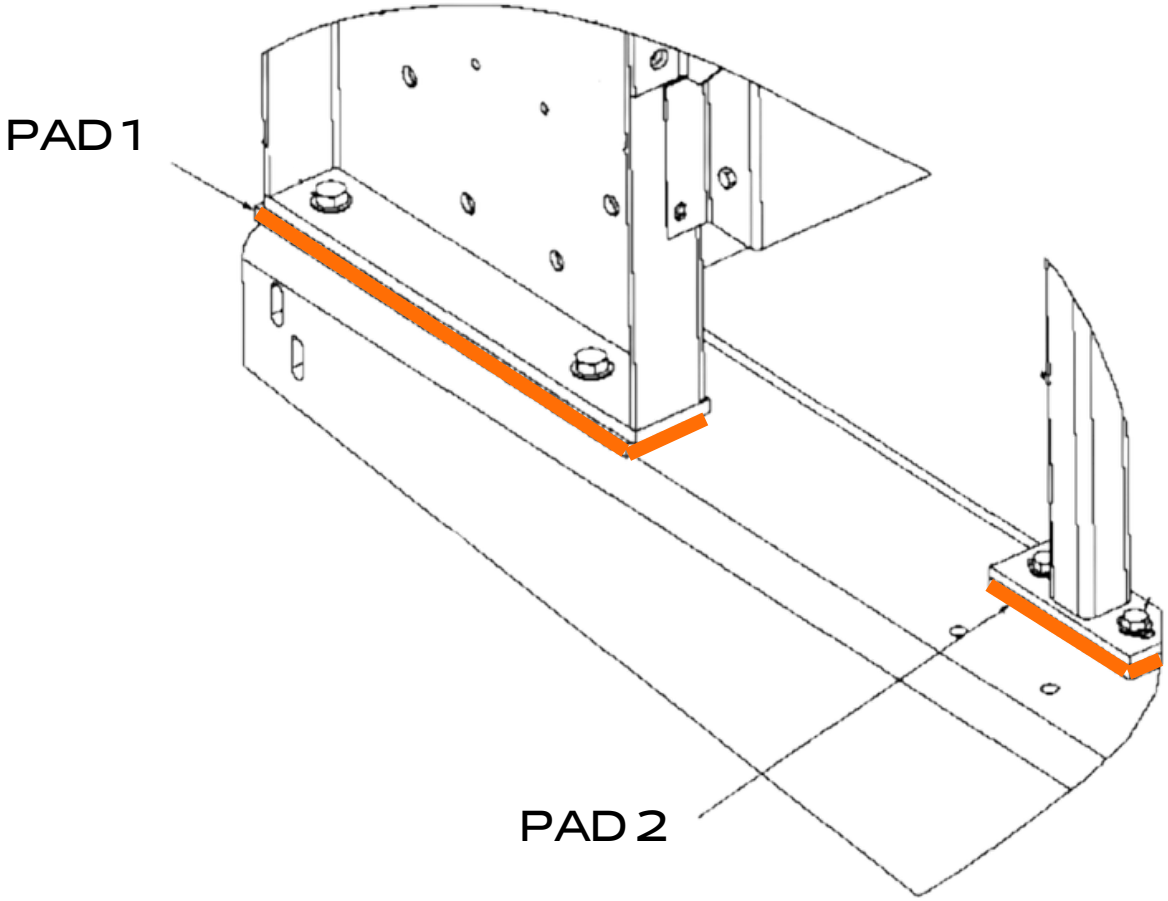

CÁMARA DE SEGURIDAD

PART NO.	DESCRIPTION
57608010	PAD,ANTI-VIBRATION
57608069	PAD,ANTI-VIBRATION

CONJUNTO ACCESORIOS DE WINCHE AUXILIAR

PART NO.	DESCRIPTION
57968711	ROPE,WIRE,5/8",ASM
58474353	OVERHAUL,BALL,WITH HOOK

SISTEMA DE LAVADO POR AGUA

PART NO.	DESCRIPTION
	HIDRO LAVADORA ELÉCTRICA
	HIDRO LAVADORA A COMBUSTIBLE
	PISTOLA DE ALTA PRESIÓN
	CARRETE PARA MANGUERA DE AGUA
	BOMBA PARA AGUA